LARTET

DN-107P

Multifunction: BCD, Counter, Tachometer, etc

57 mm high digits. Industrial environment
Readable from up to 30m
4 displaying sides. 360º displaying.

Application field

Easy to configure for wide range of applications. PNP, NPN or contact 12 a 24V DC inputs.
Digital control from PLC, counter, tachometer, chronometer, timer and binary control.

General specifications

Numeric display height	57mm
Viewing	30 meters
Characters distribution	0 a 9, A,B,C,D [space]
Maximum environmental lighting	1000 lux
Power supply	88 to 264 VAC 47 to 63Hz. Option 24VCC
Nº of displaying sides	Four
Box	Aluminium extruded
Assembly	Fixation on flat surface
Digital inputs	14 PNP, NPN or contact inputs from 12 to 26Vcc.
Parameter programming	By pushbuttons
Operating temperature	-20° to 60°C
Storage temperature	-30° to 70°C
Protection level	IP41

Multiplexed BCD	9 bits. 3 or 4 digits models.
Direct BCD	14 bits. Only 3 digits
Counter	Multiplier and divisor. Maximum frequency 10kHz
Tachometer	Display value adjustable. Maximum frequency 15kHz
Chronometer	Hour and minutes or Minutes and seconds
Binary	14 bits. From 0 to 9999

Fixation

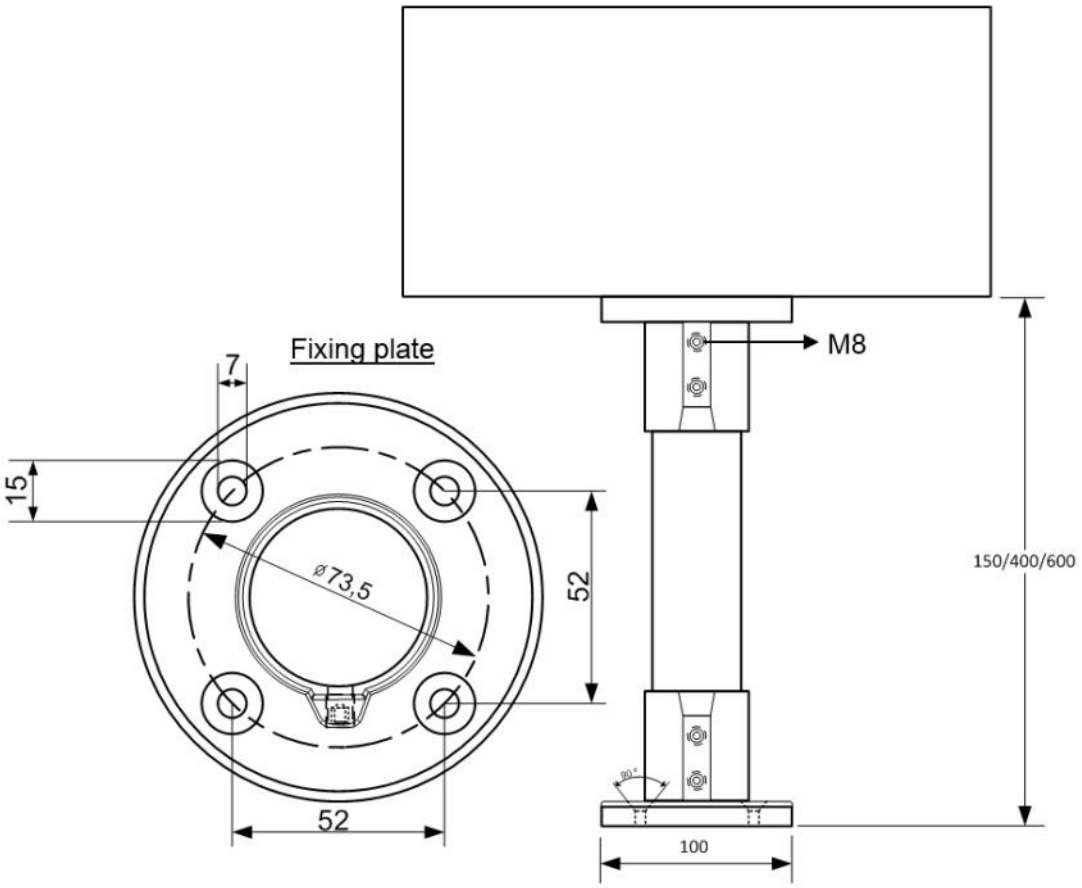

All the measurements are in millimeters

Dimensions

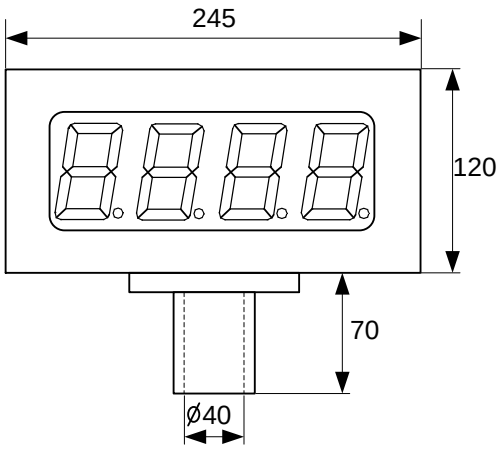

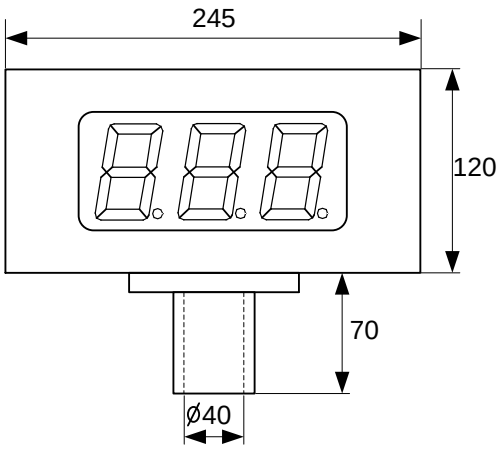

Reference composition

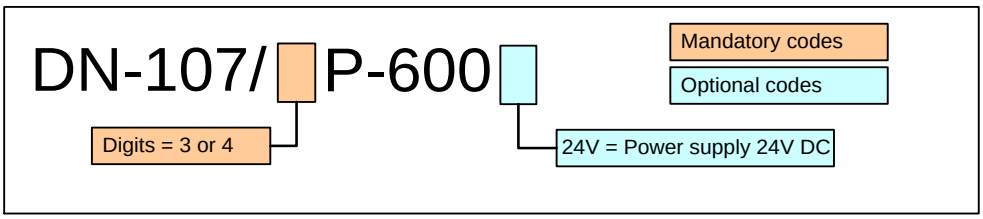

LARTET is a trade mark of TETRALEC ELECTRONICA INDUSTRIAL S.L.

Severo Ochoa, 80
Pol. Ind. Font del Ràdium
08403 GRANOLLERS
Tel. 34-938.464.828 Fax. 34-938.466.659
Email: lartet@lartet.com
Web: www.lartet.com