OPERATION MANUAL

FOR DISPLAY

DN-107P

1227K13D

Index

1. INTRODUCTION

The family of numeric displays **DN-107P** has been designed to provide, in a single display, the following functions:

Direct BCD. Only for 3 digits displays, with 12 inputs you may codify 3 digits. Two more inputs lest you to codify the dot position.

Multiplexed BCD. For displays up to 4 digits. With 8 inputs you may codify all 4 digits values and their dots.

Counter. For displays up to 4 digits. Inputs for preset, reset, increase and decrease. Input with fast and low speed selectable. Back-up for display value if no power supply.

Tachometer. For displays of 3 or 4 digits. The display value is proportional to the input frequency. Totally configurable.

Chronometer. For displays of 3 or 4 digits. It lets you configure a chronometer with hours:minutes or minutes:seconds running in increment or decrement. The display has inputs for preset, reset and input for run/stop.

Binary. For displays up to 4 digits. Displays the decimal value of binary codes represented by the 14 inputs. Maximum value: 9999.

The size of digits of **DN-107P is 57mm.** The viewing distance from 30m to 120m, is one of the most interesting characteristics.

2. GENERAL CHARACTERISTICS.

2.1. Electrical characteristics

2.1.1. Electrical characteristics of the DN-107/P displays.

Supply Voltage.....88 to 264 VAC 47 to 63Hz.(Optional 24V)
Consumption .....35VA.
Display.....7 segments, 57mm high + decimal point.
.....Red led colour. Viewing distance: max 30 meters.
Parameter memory.....Eeprom.
Control inputs.....12 to 24VCC. PNP NPN or Contact.
Relay option (R).....Contact SPDT. Maximum 48V 1A
Environmental Conditions.....Operation Temperature: -20 to 60ºC.
.....Storage Temperature: -30ºC to 70ºC.
.....Humidity: 5-95% RH non condensing.
.....Maximum environmental illumination: 1000 lux.
.....Sealing: IP41.

2.2. Dimensions and fixing of the displays

2.2.1. Dimensions of the displays DN-107/3

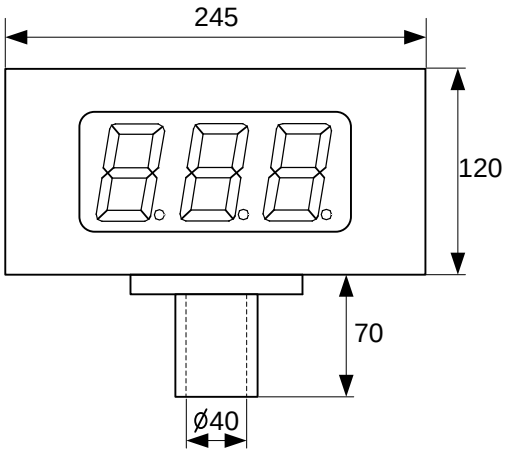

All the measurements are in millimeters

2.2.2. Dimensions of the displays DN-107/4

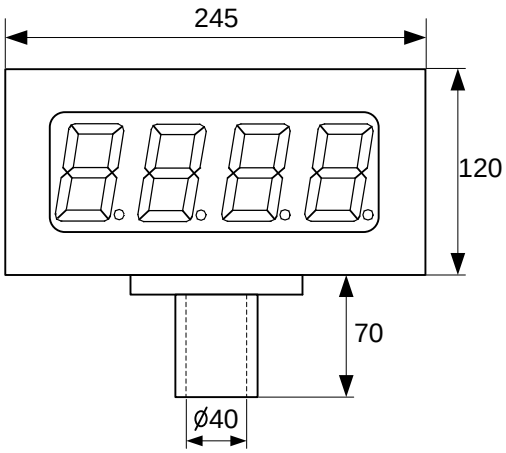

All the measurements are in millimeters

2.2.3. Fixing of the displays

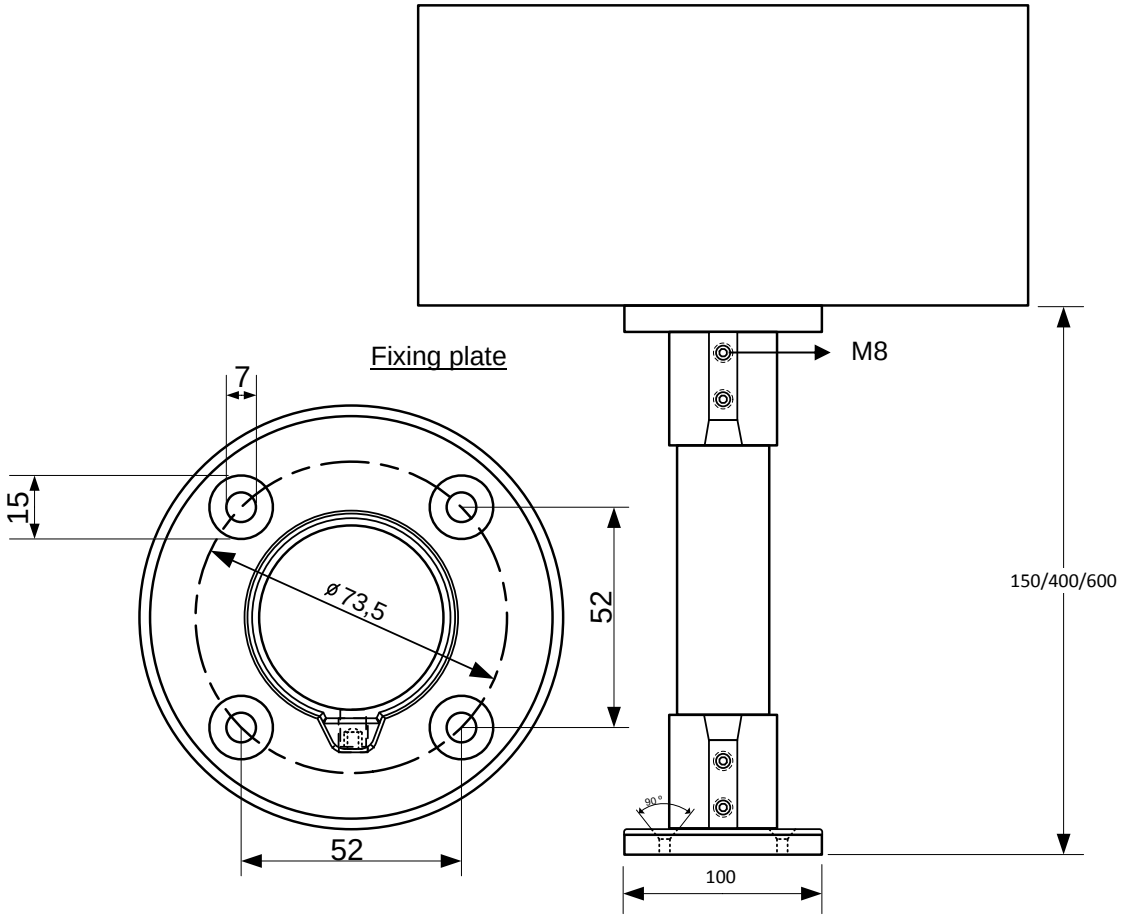

All the measurements are in millimeters

3. INSTALLATION

The installation of the DN-107NE is not particularly delicate but some important considerations must be taken into account.

The display must not be anchored to places subject to vibrations, nor should it be installed in places which generally surpass the limits specified in the display characteristics, both in terms of temperature and humidity.

The degree of protection of displays **DN-107P**, is IP41, meaning that they are protected against penetration by solid foreign objects of a diameter of about 1mm and against the vertical fall of water droplets.

Displays **DN-107P** should not be installed in places with an illumination level in excess of 1000 lux. Neither should the display be placed in direct sunlight as visibility would be lost.

In the electrical installation, proximity to lines of high intensity circulation and high voltage lines must be avoided, as well as proximity to High Frequency generators and U/F converters for motors.

3.1. Power supply

The power supply must be 88 to 264 VAC 47 to 63Hz or 19 to 36VDC.
The power supply conductor section will be in line with consumption and the ground conductor will be a minimum section of 1.5mm².
The power supply connector for 220VAC has 5 contacts and is situated in the lower part of the unit. Connect the power wires following the schema below
The power supply connector for 24VDC has 4 contacts and is situated in the lower part of the unit. Connect the power wires following the schema below

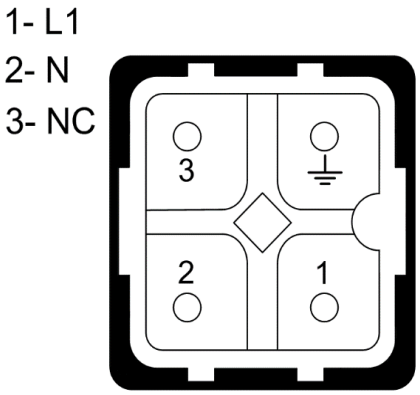

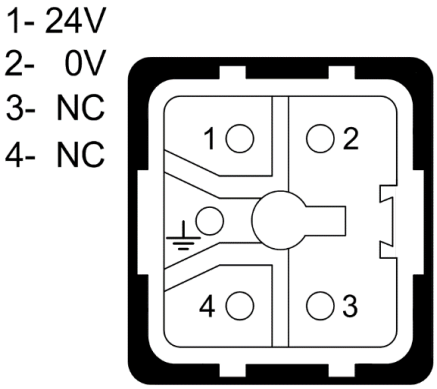

3.2. Wiring inputs

In all functions, the inputs should be between 12 to 26Vcc and allow PNP, NPN and contact

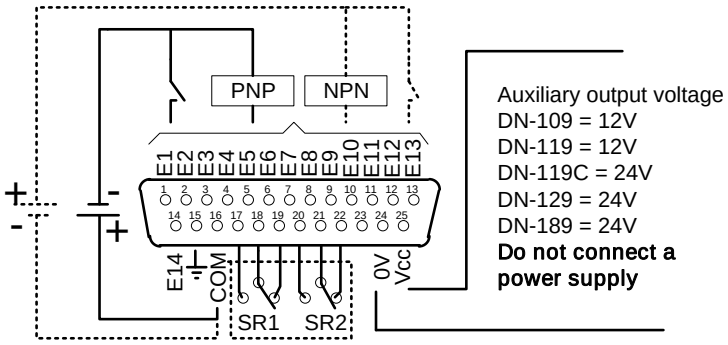

DB25 MALE CONECTOR

Each input has a different use depending on the function (BCD, counter, etc.). To know how to wire them, see 4.3 “Functions”.

The inputs power supply must be between 12V and 26V CC with a maximum wave of 500mV. Surpassing these values can damage the display. The auxiliary output can supply up to 180mA

4. OPERATION

4.1. Initial reset.

Before connecting the display to the network, we must ensure that all of the connections have been carried out correctly and that the display is firmly in place.

Each time we connect the display to the power supply network, an initial reset occurs which tests all of the segments comprising the display. The test consists of the sequential illumination of all of the digits with the number "8", all of the digits with the value "0", all of the decimal points are lit up and finally the version code.

4.2. Programming parameters.

Displays DN-107 can be adapted to the specifications of each client by the programming of parameters.

To program the parameters, the digits on the right of the display are used. The number of the parameter is indicated by the digit on the left and the decimal point flashes while the digit on the right is off.

4.2.1. Enter to modify parameters

In order to enter the sequence to modify the parameters, the Advance key “*” must be pressed and held for three seconds. After this, the first parameters will be displayed, with the digit flashing.

There are then two options:

1- Modify the parameter value

By pressing the Advance key "*", the values and the parameter number correlatively can be selected.

To increase the parameter value, press the “+” key. After parameter 7 it returns to 1.

2- Select another parameter

In order to select another parameter, the parameter number must be made to flash using the “*” key and then the new parameter may be selected using the “+” key. The number if the parameter is: The left one when the decimal dot is activated in 2 digit displays. In 3 or more digits displays the third digit starting from the right.

4.2.2. Exit modify parameters

In order to exit the sequence for modifying parameters, parameter F must be selected then press “*”.

4.2.3. Common parameters

4.2.3.1. Parameter 1: Function

This parameter determines the function of the display. Possible values are:

Parameter value	Function	Digits limit
01	8 bits. Multiplexed BCD. Models 3 or 4 digits. (-/White)	4
11	8 bits. Multiplexed BCD. Models 3 or 4 digits. (E/F)	4
02	Direct BDC. Only 3 digits models (-/White)	3
12	Direct BDC. Only 3 digits models. (E / F)	3
03	Counter	4
04	Chronometer	4
14	Chronometer format HH:MM:SS	4
05	Tachometer	4
06	Binary	4
07	Digit to digit	4
15	Tachometer with the less significant digit = 0	4
25	Tachometer with the 2 less significant digits = 0	4

See what each function does in 4.3 “Functions”.

In 01/11 (8 bit multiplexed BCD) and 02/12 (direct BCD) functions, the function is the only parameter configurable.

The chronometer function 14 is used in displays with format HH:MM . This function lets to display the parameter number on the fourth digit.

4.2.4. Parameters of the function 03 (Counter)

Parameter 2. Co: Multiplying or splitter factor, maximum frequency and preset function.
Parameter 3. P1: Value of preset 1.
Parameter 4. P2: Value of preset 2.
Parameter 5. A1: Value of alarm 1.
Parameter 6. A2: Value of alarm 2.
Parameter 7. S1: Activation and temporization conditions of output 1.
Parameter 8. S2: Activation and temporization conditions of output 2.
Parameter 9. FA: Value of multiplying or splitter factor.
Parameter A. PU: Decimal point position.
Parameter F. in: Exit programming parameters.

4.2.4.1. Parameter 2 Co

This is a 2-digit parameter. The function of each digit is indicated in the following table.

Left digit	Operating modes	Right digit	Automatic function
0	High counting frequency	0	Not activated
1	Low counting frequency	1	Counter = Alarm 1 → Reset
		2	Counter = Alarm 2 → Reset
		3	Counter = Alarm 1 → Preset 1
		4	Counter = Alarm 2 → Preset 1
		5	Counter = Alarm 1 → Preset 2
		6	Counter = Alarm 2 → Preset 2

The digit on the left allows to adjust the type of sensor used. For contact type sensors such as pushbuttons or relays, the low count frequency must be used to eliminate contact bounces. For transistor output sensors such as inductive, photocells, etc. either of them can be used considering that the low frequency admits a maximum frequency of 100Hz.

The automatic function (right digit) allows to modify the value of the counter when it has a determinate value.

0 Counter's value not modified.
1 Resets the counter if it is equal to alarm 1
2 Resets the counter if it is equal to alarm 2
3 Loads preset 1 if it is equal to alarm 1
4 Loads preset 1 if it is equal to alarm 2
5 Loads preset 2 if it is equal to alarm 1
6 Loads preset 2 if it is equal to alarm 2

The automatic function doesn't work in high frequencies.

4.2.4.2. Parameter 3. P1: Preset 1 value

It can be from 0 to as many 9 as digits the display has.

4.2.4.3. Parameter 4. P2: Preset 2 value

It can be from 0 to as many 9 as digits the display has.

4.2.4.4. Parameter 5. A1: Alarm 1 value

It can be from 0 to as many 9 as digits the display has.

4.2.4.5. Parameter 6. A2: Alarm 2 value

It can be from 0 to as many 9 as digits the display has.

4.2.4.6. Parameter 7. S1: Activation and temporization conditions of output 1.

See 4.4.2 "Using functions counter or chronometer"

4.2.4.7. Parameter 8. S2: Activation and temporization conditions of output 2

See 4.4.2 "Using functions counter or chronometer"

4.2.4.8. Parameter 9. FA: Value of the multiplying or splitter factor

Is the value at which the counter will be increased or decreased at each new impulse. It can be programmed from the value 0.001 to 9999 (4 digit displays) and 0.01 to 999 (3 digit displays.

The display behaves a multiplier for factors greater than 1 and a divisor for less than 1.

The position of the point is adjusted after modifying the last digit on the right (No digit flashes), Press the + key to move the position of the point.

4.2.4.9. Parameter A. PU: Decimal point

Selects the decimal point position (the number of decimal digits). With a value of 0 no decimal digits will be shown.

4.2.4.10. Parameter B. So: Exit modify parameters.

In order to exit the sequence for modifying parameters, select the last parameter in the menu. Then press "*".

See the input wiring and examples in 4.3 “Functions”.

4.2.5. Parameters of function 04 (Chronometer).

The chronometer format and its maximum value depends on the display’s digit number:

3 Digits display: D.DD	Maximum value: 9.59
4 Digits display: DD.DD	Maximum value: 99.59

These displays can be configured to count hours/minutes or minutes/seconds.

Parameter 2. Co: Control of Hours-Minutes or Minutes-Seconds, increase/decrease and function preset.

Parameter 3. P1: Value of preset 1.

Parameter 4. P2: Value of preset 2.

Parameter 5. A1: Value of alarm 1.

Parameter 6. A2: Value of alarm 2.

Parameter 7. S1: Activation and temporization conditions of output 1.

Parameter 8. S2: Activation and temporization conditions of output 2.

Parameter F. in: Exit programming parameters.

4.2.5.1. Parameter 2. Co

This is a 2 digit parameter. The function of each digit is indicated in the following table.

Left digit	Operating modes	Right digit	Automatic function
0	Increase Hours/Minutes	0	Not activated
1	Decrease Hours/Minutes	1	Time = Alarm 1 → Reset
2	Inc/Dec Hours/Minutes → Input 5	2	Time = Alarm 2 → Reset
3	Increase Minutes/Seconds	3	Time = Alarm 1 → Preset 1
4	Decrease Minutes/Seconds	4	Time = Alarm 2 → Preset 1
5	Inc/Dec Minutes/Seconds → Input 5	5	Time = Alarm 1 → Preset 2
		6	Time = Alarm 2 → Preset 2
		7	Time = Alarm 1 → Stop
		8	Time = Alarm 2 → Stop

In types of working 2 and 5 (Inc./Dec. Hours/Min. → input 5 and Inc./Dec. Min./Sec. → input 5) the time is increased or decreased depending on the state of input5.

With the input 5 activated, the time **increases**. With the input 5 deactivated, the time **decreases.**

The automatic function (right digit) permits modifying the stopwatch.

0 Chronometer value not modified.
1 Resets the chronometer if it is equal to alarm 1
2 Resets the chronometer if it is equal to alarm 2
3 Loads preset 1 if it is equal to alarm 1
4 Loads preset 1 if it is equal to alarm 2
5 Loads preset 2 if it is equal to alarm 1
6 Loads preset 2 if it is equal to alarm 2
7 Stops the chronometer if it is equal to alarm 1
8 Stops the chronometer if it is equal to alarm 2

4.2.5.2. Parameter 3. P1: Preset 1 value

The maximum value is 23h:59m or 59m:59s.

4.2.5.3. Parameter 4. P2: Preset 2 value

The maximum value is 23h:59m or 59m:59s.

4.2.5.4. Parameter 5. A1: Alarm 1 value

The maximum value is 23h:59m or 59m:59s.

4.2.5.5. Parameter 6. A2: Alarm 2 value

The maximum value is 23h:59m or 59m:59s.

4.2.5.6. Parameter 7. S1: Activation and temporization conditions of output 1.

See 4.4.2 “Using functions counter or chronometer”

4.2.5.7. Parameter 8. S2: Activation and temporization conditions of output 2

See 4.4.2 “Using functions counter or chronometer”

4.2.5.8. Parameter B. So: Exit modify parameters.

In order to exit the sequence for modifying parameters, select the last parameter in the menu. Then press "*".

See the input wiring and examples in 4.3.6 “Function 4. Chronometer”.

4.2.6. Parameters of functions 05, 15 and 25 (Tachymeter).

Parameter 2. FE: input frequency
Parameter 3. dt: display’s value.
Parameter 4. EL: updating time.
Parameter 5. LI: Limit time without impulses.
Parameter 6. Pd: number of decimals.
Parameter 7. FA: mortifying factor.
Parameter F. in: Exits programming.

4.2.6.1. Parameter 2.FE: Input frequency.

Adjusts the value of the input frequency according to the following table:

Number of digits	Maximum frequency	Minimum frequency
3	999	0,01
4	9999	0,001

The decimal point is selected with the increase key (+) after programming the frequency

4.2.6.2. Parameter 3.dI: Value of the display.

Selects the number shown when the frequency is equal to the input frequency of parameter 2.

Number of digits	Maximum value	Minimum value
3	999	0,01
4	9999	0,001

The decimal point is selected with the increase key (+) after programming the frequency

4.2.6.3. Parameter 4.EL: Updating time

Selects the updating time of the display. The time is measured in tenths of seconds and the rank is between 1 and 199 (0.1s and 19.9s).

With a big updating time there will be less changes on the frequency shown by the display. If the input frequency is unstable, select a big updating time to reduce the display’s changes.

4.2.6.4. Parameter 5.LI: Time without pulses limit.

Adjust the maximum time between two impulses. If this time is surpassed, the display shows 0. The time is measured in seconds and the rank is between 1s and 99s

4.2.6.5. Parameter 6Pd: Number of decimals.

Selects the maximum number of decimal positions. If there isn't enough space to show all the integers numbers, the number of decimal positions will automatically decrease.

The possible values are: 0, 1, 2, 3, 4 and 9. A value of 9 indicates that there will be used as many decimal positions as possible.

4.2.6.6. Parameter 7.FA: Average factor.

Selects the number of samples that are used to do an average and reduce the changes. When the input frequency has a big change and you don't want to see it, the average factor reduces the change.

Each time that the data is updated, the new number erase the oldest. The possible values are from 0 to 9. The number of samples are the average factor multiplied 5.

4.2.6.7. Parameter B. So: Exit modify parameters.

In order to exit the sequence for modifying parameters, select the last parameter in the menu. Then press "*".

See the input wiring and examples in 4.3.7 " Function ".

4.2.7. Parameters of function 06 (Binary)

4.2.7.1. Parameter A. PU: Decimal points

Selects the decimal point position (the number of decimal digits). With a value of 0 no decimal digits will be shown.

4.2.8. Parameters of function 07 (Digit by digit)

Function 07 has no parameters, excepting in displays with colour or serial line options.

4.3. Functions

4.3.1. Function 1. 8 bits multiplexed BCD.

The 8 bits multiplexed BCD function allows controlling displays from 3 to 4 digits with 8 data bits. The PLCs only need 8 data bits to control an 8 bits multiplexed BCD display.

The input's power supply should be between 12V and 26V CC and can be connected to PNP, NPN and CONTACT outputs. The function of each input is:

Inputs E5 and E6: If the four inputs are 0, with the E1to E4 the decimal point position is codified. If not, they codify the digit's position and E1, E2, E3 and E4 are the code of the value.

The digit 1 is in the right of the display.

	Decimal point position				
Digit	No point	1	2	3	4
E1	0	1	0	1	0
E2	0	0	1	1	0
E3	0	0	0	0	1
E4	0	0	0	0	0

	Point selection	Digit point selection			
		1	2	3	4
ºE5	0	1	0	1	0
E6	0	0	1	1	0

Function	Symbol		:		+				/		%				-		º
= 01	Value	0	1	2	3	4	5	6	7	8	9	A	b	C	d	-	Space
= 11	Value	0	1	2	3	4	5	6	7	8	9	A	b	C	d	E	F
	E1	0	1	0	1	0	1	0	1	0	1	0	1	0	1	0	1
	E2	0	0	1	1	0	0	1	1	0	0	1	1	0	0	1	1
	E3	0	0	0	0	1	1	1	1	0	0	0	0	1	1	1	1
	E4	0	0	0	0	0	0	0	0	1	1	1	1	1	1	1	1

Example 1: Modifying one digit

Initial display value

1	2	3	4.

Replace value 3 with a 7

E8	E6	E5	E4	E3	E2	E1
0	1	1	0	1	1	1

E1-E4: Valuer = 7
E5-E6: Position 2.
This data must be stable for 5ms

E8 High (Strobe)

E8	E6	E5	E4	E3	E2	E1
0	1	1	0	1	1	1

This data must be stable for 5 ms.

Final display value

1	2	7	4.

Example 2: Modifying the decimal point position

Initial display value

1	2	3	4.

Display the decimal point in the value 3:

E8	E6	E5	E4	E3	E2	E1
0	0	0	0	1	0	0

E1-E4: Decimal point position
E5-E7: Modify the decimal point position
This data must be stable for 5ms

E8 High (Strobe)

E8	E6	E5	E4	E3	E2	E1
1	0	0	0	1	0	0

This data must be stable for 5ms.

Final display value

1	2	3.	4

4.3.2. Function 11. 8 bits multiplexed BCD

Function 11 acts in the same way as the function 1, except the values (1110 = E) and (1111= F). See the table on previous page.

4.3.3. Function 2. Direct BCD.

The direct BCD is only useful for 3 digits displays.

The BCD direct function permits control a display digit by digit with 14 inputs. Three groups of 4 inputs control the value of the digits. The other two inputs control the decimal point.

The inputs power supply should be between 12V and 26V CC and the inputs can be PNP, NPN or CONTACT.

The inputs E1-E4 control the digit 1. The one of the right.

The inputs E5-E8 control the digit 2. The one of the center.

The inputs E9-E12 control the digit 3. The one of the left.

The input E13 controls the decimal point of the digit 2. Central digit.

The input E14 controls the decimal point of the digit 3. Left digit.

The function of each input is explained in the following table.

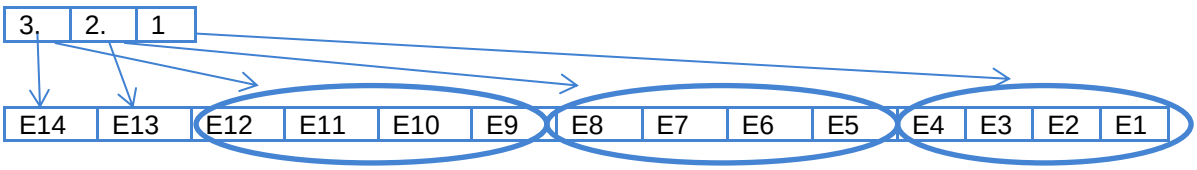

The values shown depending on the inputs are

			Displayed value															
Function = 02			0	1	2	3	4	5	6	7	8	9	A	b	C	d	E	F
Function = 12			0	1	2	3	4	5	6	7	8	9	A	b	C	d	E	Space
E1	E5	E9	0	1	0	1	0	1	0	1	0	1	0	1	0	1	0	1
E2	E6	E10	0	0	1	1	0	0	1	1	0	0	1	1	0	0	1	1
E3	E7	E11	0	0	0	0	1	1	1	1	0	0	0	0	1	1	1	1
E4	E8	E12	0	0	0	0	0	0	0	0	1	1	1	1	1	1	1	1

Example. To display

8	5.	3

The inputs must be

Point position		8				5				3			
0	1	1	0	0	0	0	1	0	1	0	0	1	1
E14	E13	E12	E11	E10	E9	E8	E7	E6	E5	E4	E3	E2	E1

4.3.4. Function 12. Direct BCD.

Function 12 acts in the same way as the function 2, except the values (1110 = E) and (1111= F). See the previous table.

4.3.5. Function 3. Counter

The counter function permits to configure the display to work as a impulses counter. It has inputs to load presets (2), increase, decrease and Reset.

It can work with a multiplying or splitter factor.

When it works with a multiplying factor, the counter is increased or decreased the number of the factor. If the multiplying factor is 5, each impulse increase or decreases 5 units in the counter.

When working with a factor less than 1, the position of the decimal point must be taken into account to see the variation of the counter. Example:

Factor value = 0.01. Decimal point position = 1

Counter value after pressing Reset (E3) = 0.0

Counter value after 10 pulses increase (E4) = 0.1

To work with low frequencies, the counter can be configured to ignore parasite impulses like bounce contacts.

The maximum frequency is 10kHz

When it arrives to the maximum or minimum the counter flashes. A 4 digits display has a maximum value of 9999 and a minimum value of -999.

Programming the automatic functions:

The automatic functions are programmed modifying the right's digit of the second parameter 2 Co. See 4.2.4 "Parameters of the function 03 (Counter)". Remember that the automatic functions are available in low frequencies.

When the counter's value is equal to one of the values of the alarms, one programmed action starts.

Example:

Parameter 2 Co = 03.	Parameter 3 P1 = 75.
Parameter 5 A1 = 40.	Parameter 9 FA = 1.

The parameter 2 has been programmed to increase in one unit (parameter 9 = 1). Load the value of preset 1 (75) when the counter's value is equal to the value of alarm 1 (40).

Displays with relay:

If the display has the relay option, the relay can be configured to be activated in different situations. Each relay has an independent parameter to program. (See **Error! No s'ha trobat l 'origen de la referència.** "Parameters of the function 03 (Counter)").

Example:

Parameter 7 S1 = 15

Activate output 1 during 2 seconds, when the counter's value is equal to the alarm 1 value.

Control inputs:

The power supply of the inputs should be between 12V and 26VCC and the inputs can be PNP, NPN or CONTACT.

E1 Loads preset 1.

E2 Loads preset 2.

E3 Reset.

E4 Increase the counter.

E5 Decrease the counter.

4.3.6. Function 4. Chronometer

The chronometer function permits working with the display as a stopwatch. It can be programmed to increase, decrease or increase/decrease depending on an input.

Besides of the control inputs that resets the display or loads a preset (it has two presets), it's also possible to reset de display, load a preset or stop it automatically with the alarms

Programming the automatic functions:

The automatic functions are programmed modifying the right's digit of the second parameter 02.Co. (See **Error! No s'ha trobat l'origen de la referència.** "**Error! No s'ha trobat l'origen de la referència.**").

When the chronometer's value is equal to one of the values of the alarms, one programmed action starts.

Example:

Parameter 2 Co = 35.
Parameter 4 P2 = 15 - 30.
Parameter 5 A1 = 30 - 28.

The parameter 2 has programmed increase minutes and seconds. Load the preset 2 (15m - 30s) when the chronometer is equal to the alarm 1 value (30m - 28s)

Displays with relay:

If the display has the relay option, the relay can be configured to be activated in different situations. Each relay has an independent parameter to program. (see 4.3.2)

Example:

Parameter 7 S1 = 58

Activate output 1 if the chronometer's value is bigger than the alarm 1, the output is flashing, 1 second is On and 1 second is Off.

Combining the automatic functions (parameter 2) with the output functions (parameters 7 and 8), the display can have many applications.

Control inputs:

The power supply of the inputs should be between 12V and 26V CC and the inputs can be PNP, NPN or CONTACT.

E1 Control Run = ON / Stop = OFF.
E2 Reset
E3 Loads preset 1
E4 Loads preset 2
E5 Increase = ON / Decrease = OFF.

4.3.7. Function 5. Tachometer

With the function tachometer we can measure the time that an event is repeated. Programming the input frequency and the shown value, you can get the necessary result.

To correct the frequency deviations of the input signal and avoid continuous changes in the display there are two parameters that allow smoothing the variations, the time between data update and the damping factor. (See 4.2.6 “Function parameters 05, 15 and 25 (Tachometer).” Parameters 4EL and 7FA)

The updating time is independent from the input frequency. If the input frequency is stable, we can program an updating time of 0.1s to read an input frequency of 0.05Hz (1 impulse every 20s). By this way the display is updated immediately after the impulse is received. The updated data between the impulses has the same result.

To use the tachometer to count the turns in a minute (rpm), see examples below.

Connexion: the input signal of the function tachometer is E6, the pin number 6 of the DB25 connector (see 3.2 “Wiring inputs”). The maximum input frequency is 15kHz.

Before using the tachometer, you have to program the parameters. See 0 “In order to exit the sequence for modifying parameters, select the last parameter in the menu. Then press "*".

See the input wiring and examples in 4.3.6 “Function 4. Chronometer”.
”

Examples:

Show the value of the input frequency without correction.
The input frequency is 100Hz. Variable oscillator. 4 digits display.

Parameter	Value	
2.FE	0001	1Hz input frequency
3.dl	0001	Display 1 when 1 Hz input frequency
4.EL	001	Update value every 0,1s
5.LI	01	Maximum time without pulses: 1s.
6.Pd	9	Maximum number of decimals shown
7.FA	0	Without average factor

Show the value of the input frequency without correction.
The input frequency is 100Hz. A little stable oscillator. 4 digits display.

Parameter	Value	
2.FE	0001	1Hz input frequency
3.dl	0001	Display 1 when 1 Hz input frequency
4.EL	030	Update value every 3s
5.LI	01	Maximum time without pulses: 1s.
6.Pd	1	Show 1 decimal
7.FA	0	Without average factor

Show the value of the input frequency multiplied by 25,7.

The input frequency is 10Hz. A little stable oscillator. 4 digits display.

Parameter	Value	
2.FE	0001	1Hz input frequency
3.dl	0025,7	Display 25,7 when 1 Hz input frequency
4.EL	010	Update value every 1s
5.LI	01	Maximum time without pulses: 1s.
6.Pd	2	Show 2 decimals
7.FA	2	Average factor: 2 (10 samples average)

Measure the rotation speed of a motor that turns around at 540 rpm and sends 8 impulses each turn. Frequency (540/60) x 8 = 72.

Variable oscillator. 5 digits display.

Parameter	Value	
2.FE	00072	72Hz input frequency
3.dl	00540	Display 540 when 1 Hz input frequency
4.EL	001	Update value every 0,1s
5.LI	01	Maximum time without pulses: 1s.
6.Pd	0	Without decimals
7.FA	0	Without average factor

Measure the making cadence of a machine that makes 450 pieces in an hour with a sensor that detects a piece each 8 seconds.

A little stable oscillator. 4 digits display.

Parameter	Value	
2.FE	0,125	0,125 input frequency = 1 piece each 8s
3.dl	0450	Display 450 when 0,125 Hz input frequency
4.EL	020	Update value every 2
5.LI	10	Maximum time without pulses: 10s.
6.Pd	0	Without decimals
7.FA	1	Average factor: 1 (5 samples average)

Measure the making cadence of a machine that makes 16200 pieces in an hour with a sensor that detects a piece each 4.5 seconds.

A little stable oscillator. 4 digits display.

Parameter	Value	
2.FE	0004,5	4,5Hz input frequency
3.dl	16200	Display 16200 when 4,5 Hz input frequency
4.EL	080	Update value every 8s
5.LI	02	Maximum time without pulses: 2s.
6.Pd	0	Without decimals
7.FA	8	Average factor: 8 (40 samples average)

4.3.8. Function 15. Tachometer with the less significant digit = 0.

The function 15 has the same working as the function 5 but the digit of less weight is always 0.

Example: Value of the frequency without correction = 145
Shown value = 140

4.3.9. Function 25. Tachometer with the 2 less significant digit = 0.

The function 25 has the same working as the function 5 but the two digits of less weight are always 0.

Example: Value of the frequency without correction = 145
Shown value = 100

4.3.10. Function 6. Binary.

The function 6 permit display a 9 bits binary value in decimal format.
Value 0 is shown with all inputs OFF and value 512 is shown with all inputs ON.
The parameter A. Pu allows configuring the decimal point position.

4.3.11. Parameter 7. Digit by digit

Function 7 allows the user to modify every digit independently using an input.
If the display has more than 7 digits, each of the inputs increments one digit. On the other side, inputs 1 to 7 allow incrementing digits and 8 to 14 decrement digits
Digit one is the one on the far right of the display.
The decimal point cannot be configured.

Input	Function
E1	Incr. Digit 1
E2	Incr. Digit 2
E3	Incr. Digit 3
E4	Incr. Digit 4
E8	Decr. Digit 1
E9	Decr. Digit 2
E10	Decr. Digit 3
E11	Decr. Digit 4

4.4. Colour configuration

The colour option allows you to modify automatically the display colour according to the present value. The possible colours are: Red, Green and Yellow.

In order to be able to manage the colour 2 internal bits are used, they change depending on display value. Eight parameters are needed to set up the levels. Four parameters are used to define the activation form and the activation level. The other four allow defining the colour according to a combination of the 2 internal bits.

The parameter number that defines the activation mode and the activation level changes depending on the function used.

In the displays with relay output, the counter and chronometer functions use the same parameters for the colour than the relay output. So, the colour change must be related with the relay activation

The following table defines the parameters depending on the function used in the display.

	BCD	Count	Chronom	Tachym	Binary	Digit by digit
A1	8.A1	5.A1	5.A1	8.A1	8.A1	8.A1
A2	9.A2	6.A2	6.A2	9.A2	9.A2	9.A2
S1	A.S1	7.S1	7.S1	A.S1	A.S1	A.S1
S2	B.S2	8.S2	8.S2	B.S2	B.S2	B.S2
nr = r1 y r2 deactivated						
r1 = r1 activated						
r2 = r2 activated						
r3 = r1 y r2 activated						

4.4.1. Using functions BCD, tachometer. binary or digit by digit

4.4.1.1. Parameters to define the internal bit r1.

To set up the internal bit **r1** parameters **A1** and **S1** are used.

Parameter S1 is used to set up the activation form and delay or hysteresis.

Parameter A1 is used to set up the trigger level. The most significant digit allows setting up a negative value.

Parameter S1			
Left Digit	Control bit	Right Digit	Set/Reset
0	ON if Value > Parameter A1	0	No delay / No hysteresis
1	ON if Value < Parameter A1	1	Delay 1s
2	Always OFF	2	Delay 2s
		3	Delay 4s
		4	Delay 6s
		5	Delay 10s
		6	Hysteresis = 2
		7	Hysteresis = 4
		8	Hysteresis = 8
		9	Hysteresis = 12

4.4.1.2. Parameters to define the internal bit r2.

To set up the internal bit **r2** parameters **A2** and **S2** are used.

Parameter S2 is used to set up the activation form and delay or hysteresis.

Parameter A2 is used to set up the trigger level. The most significant digit allows setting up a negative value.

Parameter S2			
Left Digit	Control bit	Right Digit	Set/Reset
0	ON if Value > Parameter A2	0	No delay / No hysteresis
1	ON if Value < Parameter A2	1	Delay 1s
2	Always OFF	2	Delay 2s
		3	Delay 4s
		4	Delay 6s
		5	Delay 10s
		6	Hysteresis = 2
		7	Hysteresis = 4
		8	Hysteresis = 8
		9	Hysteresis = 12

4.4.2. Using functions counter or chronometer

4.4.2.1. Parameter 7. S1: Activation and temporization conditions of output 1.

ONLY FOR DISPLAYS WITH RELAY OUTPUT WORKING IN LOW FREQUENCIES (see Error! No s'ha trobat l'origen de la referència. **"**Error! No s'ha trobat l'origen de la re ferència.**").**

Permits programming the activation conditions of output 1 and the time that will be activated. This parameter has two digits. The function of each one is explained in the following table where, value means the value of the counter in the counter function or the time in the timer function:

Left digit	SR1 output condition	Right digit	Output delay
0	Not activated	0	No delay
1	SR1 ON if Value = Level Alarm 1	1	0,5s delay
2	SR1 ON if Value >= Level Alarm 1	2	0,8s delay
3	SR1 ON if Value = Level Alarm 2	3	1s delay
4	SR1 ON if Value <= Level Alarm 2	4	1,5s delay
5	SR1 ON if Value > Level Alarm 1	5	2s delay
6	SR1 ON if Value < Level Alarm 1	6	0,5s flashing.
7	SR1 ON if Value > Level Alarm 2	7	0,8s flashing
8	SR1 ON if Value < Level Alarm 2	8	1s flashing
9	SR1 ON if Counter = 0	9	Output always OFF
A	SR1 ON if Value <= AL1 and >= AL2		
b	SR1 ON if Value >= AL1 and <= AL2		

SR1 is the state of the output 1. AL1 is the value of alarm 1. AL2 is the value of alarm 2. SR1 will be activated when the activation conditions have been accomplished. SR1 will be deactivated when the time has passed or when the activation condition is not accomplished.

4.4.2.2. Parameter 8. S2: Activation and temporization conditions of output 2

ONLY FOR DISPLAYS WITH RELAY OUTPUT WORKING IN LOW FREQUENCIES **(see** Error! No s'ha trobat l'origen de la referència. **"**Error! No s'ha trobat l'origen de la re ferència.**").**

Permits programming the activation conditions of output 2 and the time that will be activated. This parameter has two digits. The function of each one is explained in the following table:

Left digit	SR2 output condition	Right digit	Output delay
0	Not activated	0	No delay
1	SR1 ON if Value = Level Alarm 1	1	0,5s delay
2	SR1 ON if Value >= Level Alarm 1	2	0,8s delay
3	SR1 ON if Value = Level Alarm 2	3	1s delay
4	SR1 ON if Value <= Level Alarm 2	4	1,5s delay
5	SR1 ON if Value > Level Alarm 1	5	2s delay
6	SR1 ON if Value < Level Alarm 1	6	0,5s flashing.
7	SR1 ON if Value > Level Alarm 2	7	0,8s flashing
8	SR1 ON if Value < Level Alarm 2	8	1s flashing
9	SR1 ON if Value = 0	9	Output always OFF
A	SR1 ON if Value <= AL1 and >= AL2		
b	SR1 ON if Value >= AL1 and <= AL2		

SR2 is the state of the output 2. AL1 is the value of alarm 1. AL2 is the value of alarm 2. SR2 will be activated when the activation conditions have been accomplished. SR1 will be deactivated when the time has passed or when the activation condition is not accomplished.

4.4.3. Parameters to define the colour.

To define the colour the 2 internal bits (**r1 and r2**) are used.

The following parameters are used to define colours.

nr	Colour if internal bits are OFF. To change the colour push * key. Upon pressing + the next parameter is shown.
r1	Colour if internal bit **r1 or SR1** is ON. To change the colour push * key. Upon pressing + the next parameter is shown.
r2	Colour if internal bit **r2 or SR2** is ON. To change the colour push * key. Upon pressing + the next parameter is shown.
r3	Colour if internal bits **r1** and **r2** or **SR1** and **SR2** are ON. To change the colour push * key. Upon pressing + the next parameter is shown.

4.4.4. Work with only one colour.

To work always with only one colour set up the following parameters:

BCD	Counter
Tachometer	Chronometer
Binary	
Digit by digit	

Parameter		Value
8.A1	5.A1	0
9.A2	6.A2	0
A.S1	7.S1	20
B.S2	8.S2	20
nr	nr	colour
r1	r1	colour
r2	r2	colour
r3	r3	colour

Parameters **8.A1, 9.A2, 5.A1** and **6.A2** may have any value.
Parameters **nr, r1, r2** and **r3** should have the same colour.
Independently of work colour, the parameters set up always uses RED colour.

STATEMENT OF CONFORMITY

Tetralec Electronica Industrial S.L.
c/ Severo Ochoa, 80
Polígono Industrial Font del Radium
08403 Granollers

As the builder of the equipment of the **LARTET** brand:

Modelo: DN-107P in all versions.

We declare under our sole responsibility that the aforementioned product complies with the following European directives:

Directive: LVD 2006/95/CEE Low Voltage Directive.
Standard UNE-EN61010-1 Security in electric equipment.

Directive: EMC 2014/30 UE Electromagnetic Compatibility
Standard UNE-EN 61000-6-4 Generic Emission Standard. Industrial environment.
Directive 2011/65/CE: Restriction of the use of certain hazardous substances in electrical and electronic equipment

Granollers, 5th February 2013

Jordi Gavaldà